Rosen Suzuki of Milwaukee

Photo 5-- of existing SUZUKI sign with Rosen Nissan in backround

040395 photos

Rosen Suzuki of Milwaukee

Photo 6-- existing SUZUKI site sign with existing KIA building in the backround

Rosen Suzuki of Milwaukee

Photo 7-- existing SUZUKI sign looking south along east property line with signs in backround

Photo 8

Photo 8-- existing site signs along east property line along S 27th Street

Rosen Suzuki of Milwaukee

Photo 9-- existing landscaping looking north along east property line adjacent to S 27th Street

Rosen Suzuki of Milwaukee

Photo 10-- existing parking aisle looking west from east property line adjacent to S 27th Street

Rosen Suzuki of Milwaukee

Photo 11-- existing parking aisle looking west from east property line adjacent to S 27th Street

Rosen Suzuki of Milwaukee

Photo 12-- existing parking aisle looking west to future SUZUKI building

Rosen Suzuki of Milwaukee

Photo 13-- existing parking aisle looking east from future SUZUKI building

Rosen Suzuki of Milwaukee

Photo 14-- from southwest corner of KIA building
aligned to front wall future SUZUKI building

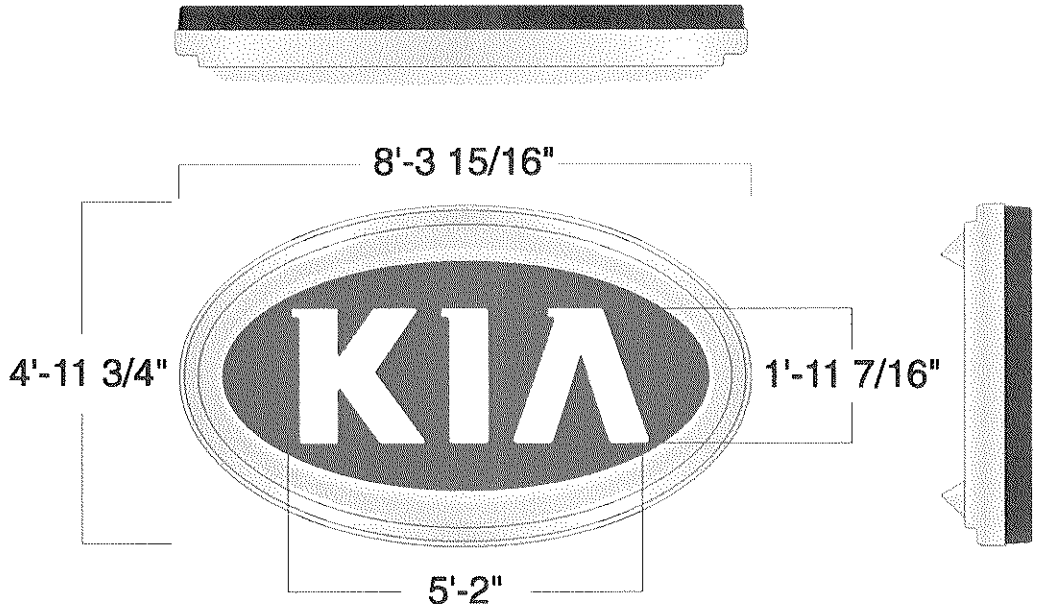

KWL-4

Total Square Footage= 32.65sq'

Account	KIA	**Drawn By**	J Allington
Project Title	KWL-4	**IP Rep.**	D Estep
Scale	1:32	**Approved By**	
Date Created	23 OCT 2003	**Date Revised**	

All ideas, plans or arrangements indicated in this drawing are copyrighted and owned by ImagePoint and shall not be re-produced, used by or disclosed to any person, firm or corporation for any purpose whatsoever without written permission of ImagePoint.

ImagePoint.
PO Box 59043
Knoxville, TN 37950-9043
1-800-444-7446
www.imagepoint.com

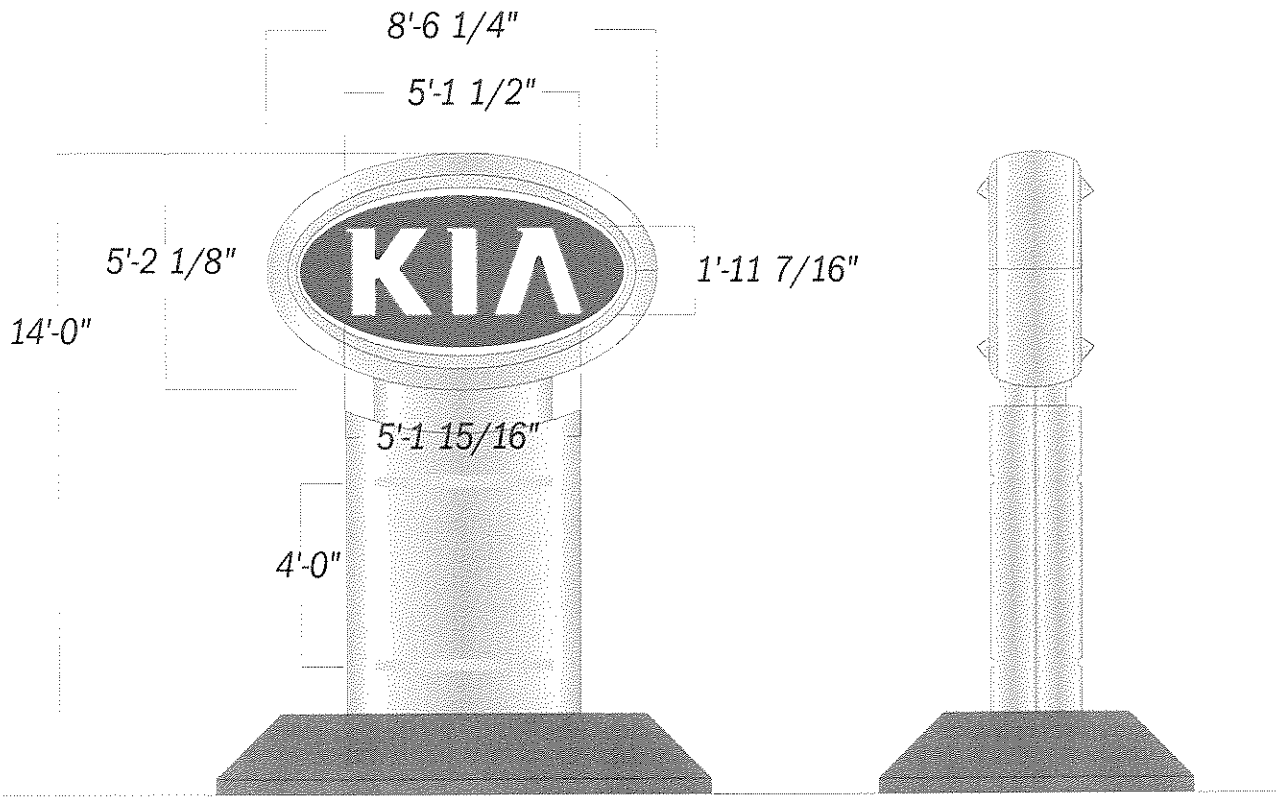

KPS-4 (14'-0" OAH)

Total Square Footage =35sq'

Account	KIA	**Drawn By**	J.DiLuzio
Project Title	KIA KPS-4 14ft	**IP Rep.**	K. Boling
Scale	1:48	**Approved By**	
Date Created	26 MAR 04	**Date Revised**	

All ideas, plans or arrangements indicated in this drawing are copyrighted and owned by ImagePoint and shall not be reproduced, used by or disclosed to any person, firm or corporation for any purpose whatsoever without written permission of ImagePoint.

ImagePoint™
PO Box 59043
Knoxville, TN 37950-9043
1-800-444-7446
www.imagepoint.com

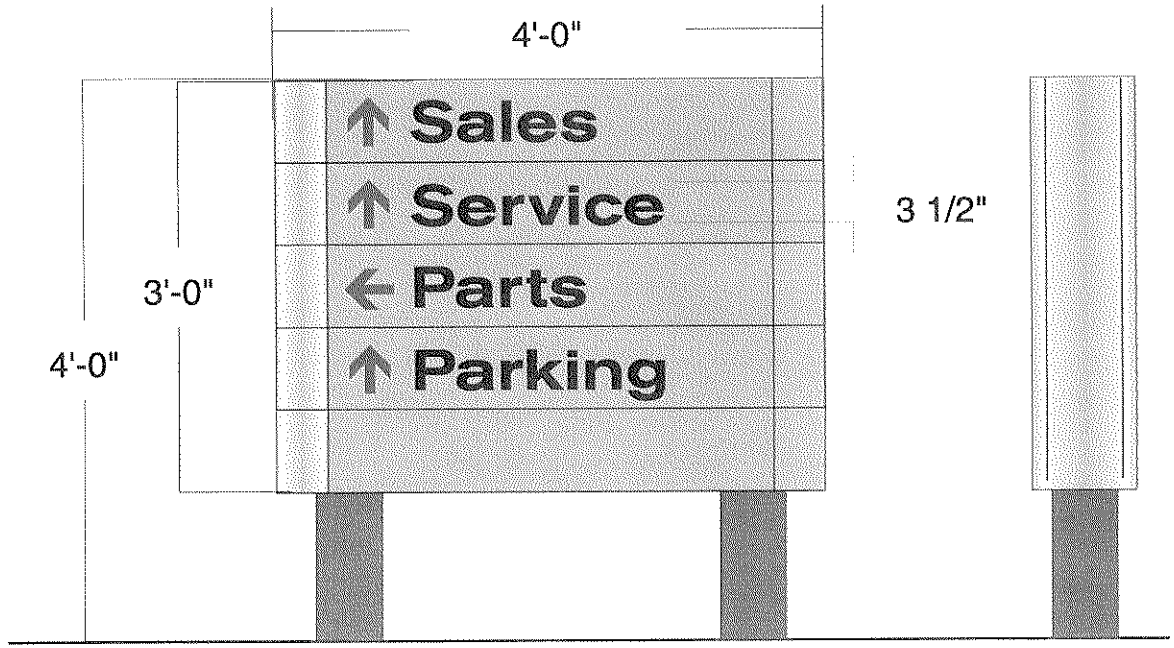

Total Square Footage= 12sq'

*(Individual sign text will vary)

Account	KIA	**Drawn By**	J Allington
Project Title	KDR-12	**IP Rep.**	D Estep
Scale	1:16	**Approved By**	
Date Created	23 OCT 2003	**Date Revised**	

Pg 1 of 1

All ideas, plans or arrangements indicated in this drawing are copyrighted and owned by ImagePoint and shall not be re-produced, used by or disclosed to any person, firm or corporation for any purpose whatsoever without written permission of ImagePoint

ImagePoint™
PO Box 59043
Knoxville, TN 37950-9043
1-800-444-7446
www.imagepoint.com

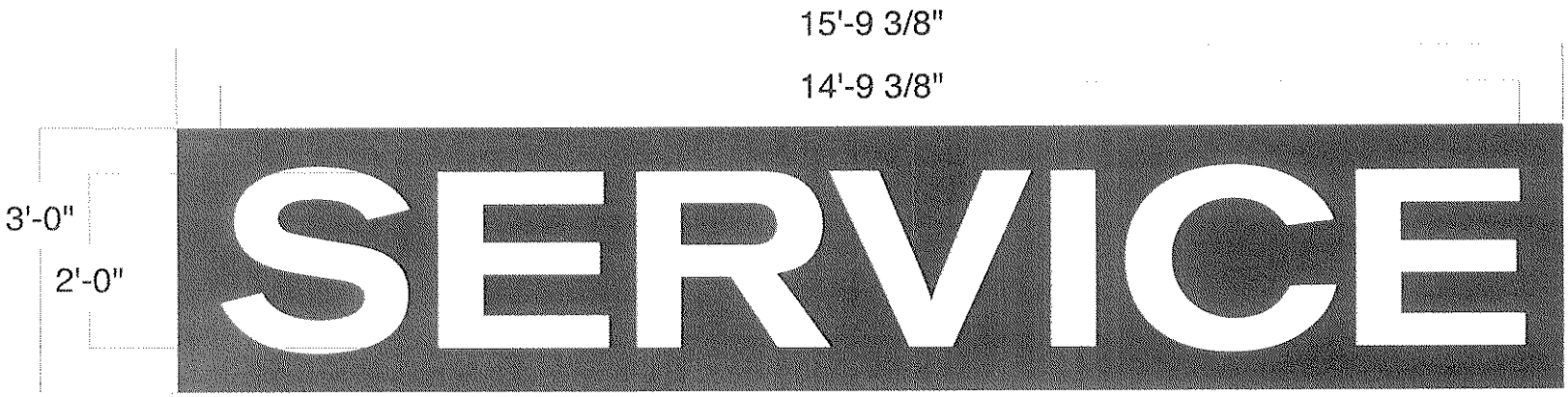

Account	KIA	**Drawn By**	J Allington
Project Title	KWS-24_Service	**IP Rep.**	D Estep
Scale	1:24	**Approved By**	
Date Created	14 OCT 2003	**Date Revised**	

Pg 1 of 1

All ideas, plans or arrangements indicated in this drawing are copyrighted and owned by ImagePoint and shall not be reproduced, used by or disclosed to any person, firm or corporation for any purpose whatsoever without written permission of ImagePoint.

ImagePoint™
PO Box 59043
Knoxville, TN 37950 9043
1 800 444 7446
www.imagepoint.com